WRM PAVER GRATE FASTENING KITS

WRM Paver Grate Fastening Kits for use with WRM Paver Grates provide a secure connection between pedestals and pavers on a finished deck surface. The weight of the grates and pavers create a monolithic system to hold the system in place and mitigate against wind uplift.



SCREW & WASHER

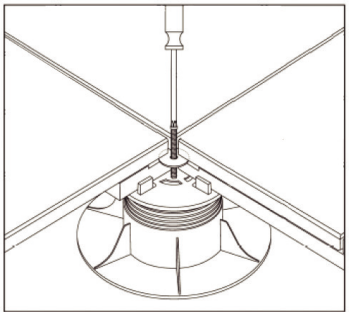

For pedestal heights > 2.5"

Easily removable for repairs and maintenance

WRM Paver Grates are engineered with a slot cut in each corner enabling a special washer and finishing screw to be inserted. Once all grates are in place, the washer and screw are invisibly screwed into the corresponding screw pad at the top of the pedestal to "lock down" the grates, ensuring a safe, secure, and level surface. The fastening kit makes removal of a centrally-located grate simple, and eliminates the need to remove all grates from the perimeter up to that point. The #9 x 2.5" fastening screw is made of stainless steel, and the $^{3}/_{16}$" x $1^{1}/_{2}$" washer is made of zinc-coated alloy steel.

Fastening kit pedestal height > 2.5" installation:

First, porcelain pavers are adhered to the paver grates. Three paver grates are then placed onto one pedestal. Insert washer into the corner slots of each grate. Insert the screw into the washer and partially screw into the pilot hole in the middle of the pedestal head. Place fourth paver grate on pedestal, lining up the washer into the corner slot of the fourth paver grate. Tighten screw to fasten down all of the paver grates. Tighten down securely but do not overtighten.

PLASTIC PINS

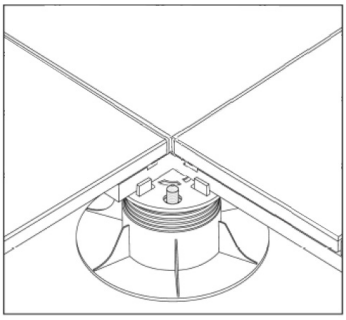

For pedestal heights < 2.5"

More permanent connection

WRM Paver Grates have a connection hole in the bottom of grate to secure a plastic pin, which provides a connection to the pedestals. Once all grates are in place, the plastic pins are invisible, and ensure a safe, secure, and level surface. With the plastic pin fastening kit, the connection is more permanent. So, if removal is required, the pins must be broken and replaced as needed. The pins are made of polypropylene plastic with natural UV inhibitor.

Fastening kit pedestal height < 2.5" installation:

First, porcelain pavers are adhered to the paver grate. Then, insert plastic pins into pedestal heads. Place the paver grates onto the corresponding quadrant of the pedestal head, so that the plastic pins and connection hole in the bottom of the grate line up. Push down on grates until pin is fully inserted into the grate and resting on pedestal head. Ensure complete connection by stepping on grate/paver corners after installation.

W. R. MEADOWS, INC.
P.O. Box 338 • Hampshire, IL 60140-0338
Phone: 847/214-2100 • Fax: 847/683-4544
1-800-342-5976
www.wrmeadows.com • info@wrmeadows.com