WRM PORCELAIN PAVER GRATES

WRM Porcelain Paver Grates enhance impact resistance for porcelain pavers in pedestal applications. They also provide a structural surface for loose laid pavers on deck pedestals. Engineered to attach to the pedestals, the WRM Porcelain Paver Grates create a stable and secure foundation and mitigate wind uplift resistance. Multiple options are available for adhesion to porcelain pavers. For use with WRM Paver Grate Fastening Kit.

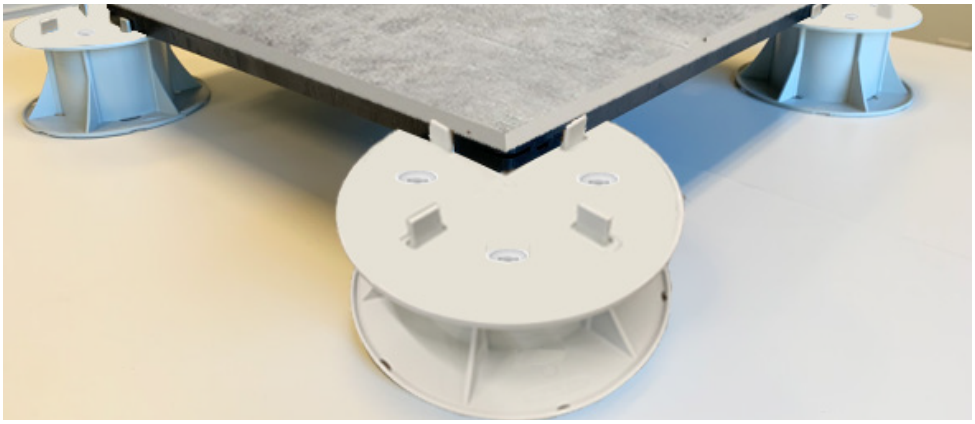

Paver Grate Fastening Kit
Screw & Washer

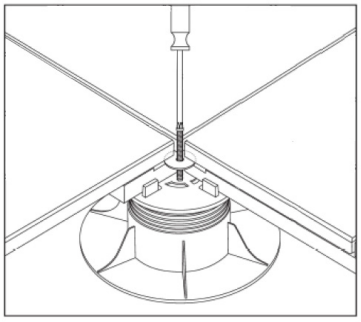

MATERIAL	A blend of Nylon, Glass, and Stabilizer
DIMENSIONS	23.5" x 23.5" x 0.44" 11.75" x 23.5" x 0.44"
WEIGHT	23.5" x 23.5" x 0.44" = 3.5 lbs per grate 11.75" x 23.5" x 0.44" = 1.75 lbs per grate
WIND UPLIFT RESISTANCE	Uplift Pressure Resistance: -75 psf** Per Miami Dade TAS 114D testing requirement
ACCOMPANYING WRM PRODUCTS	WRM Pedestals WRM Porcelain Pavers WRM Vista Modules WRM Planters Artificial Turf

** No safety factor. For uplift pressure resistance greater than 75 psf contact W. R. MEADOWS for Maximum Wind Uplift Paver Grate.

W. R. MEADOWS, INC.
P.O. Box 338 • Hampshire, IL 60140-0338
Phone: 847/214-2100 • Fax: 847/683-4544
1-800-342-5976
www.wrmeadows.com • info@wrmeadows.com

ADHERING PAVER TO WRM PAVER GRATE PRIOR TO INSTALLATION

STEP #1: Paver Grate Placement

Place paver grate on a clean, level surface, so that the solid side is face up and the waffle side is face down.

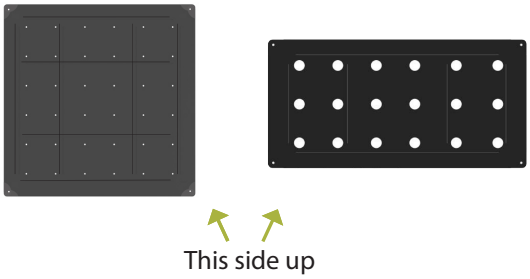

STEP #2: Adhesive

Run a 1/2" diameter bead of 3M 550, or equivalent plastic and porcelain adhesive 3/4" from the edge and around the perimeter of the grate and in a cross pattern in the middle of the grate.

IMPORTANT: For proper adhesion and performance, adhesive must be applied exactly as shown.

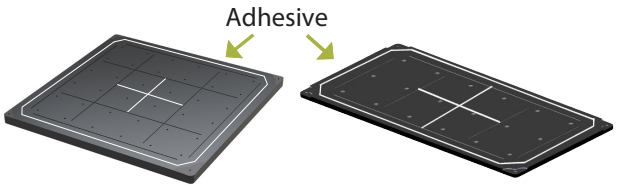

STEP #3: Paver Placement on Paver Tray

Place the WRM Paver squarely onto the adhesive side of the WRM Paver Tray, carefully aligning by hand to make sure that the paver does not extend beyond any edge of the tray.



STEP #4: Assembly Stacking

Repeat the first three steps to create a WRM Paver Tray Assembly. Stack assemblies no more than five assemblies high. Let them remain stacked for 2 to 4 hrs to allow the adhesive to cure before handling.